JAINNHER®

CNC PLUNGE / ANGULAR CYLINDRICAL GRINDING MACHINE

The Ultimate Cylindrical Grinder
Unmatched Performance

JAINNHER CNC Plunge / Angular Cylindrical Grinding Machine More Poof of JAINNHER's Exclusive Technological Capabilities!

CNC ANGULAR CYLINDRICAL GRINDING MACHINE JHA-2003CNC

CNC PLUNGE CYLINDRICAL GRINDING MACHINE JHP-2003CNC

APPLICABLE INDUSTRIES

- Gear shafts and shafts in automotive/ motorcycle gearboxes
- Precision machine tools gear shafts and shafts
- Air/hydraulic cylinders and valve shafts
- Robot arm parts
- Precision measuring instruments, electronic, optical and medical equipment

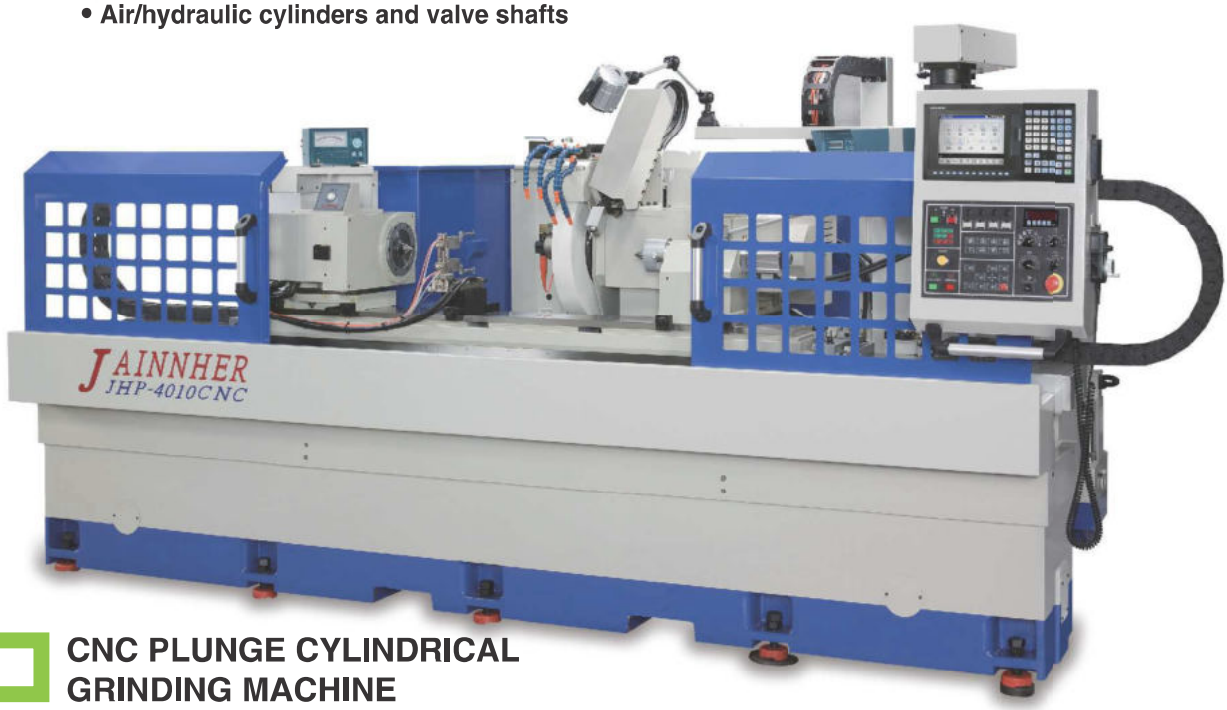

CNC PLUNGE CYLINDRICAL GRINDING MACHINE

JHP-3506CNC JHP-4006CNC
JHP-3510CNC JHP-4010CNC

CNC ANGULAR CYLINDRICAL GRINDING MACHINE

JHA-3505CNC JHA-4005CNC
JHA-3508CNC JHA-4008CNC

Combines Various Grinding Functions
A series of great-value cylindrical

Plunge Wheelhead

VARIOUS GRINDING APPLICATIONS:

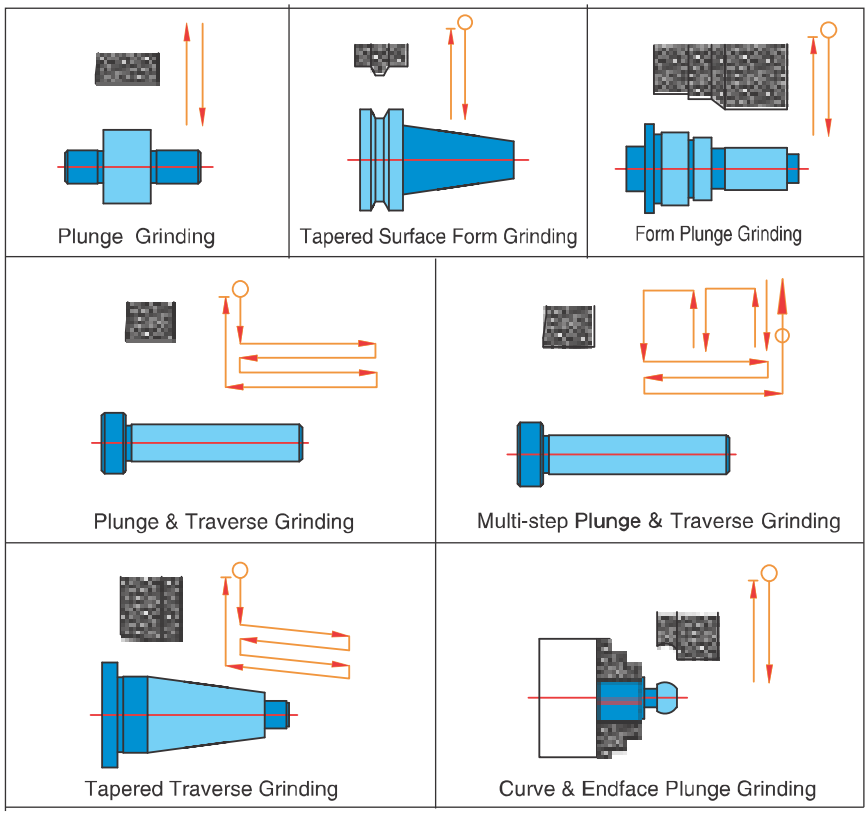

WHEEL DRESSING CYCLES:

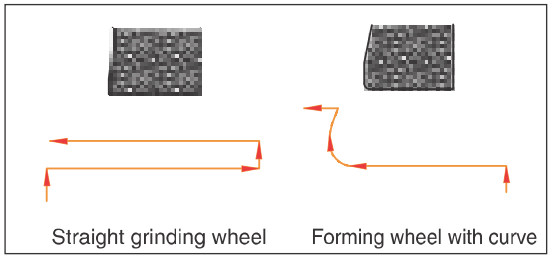

GRINDING EXAMPLE:

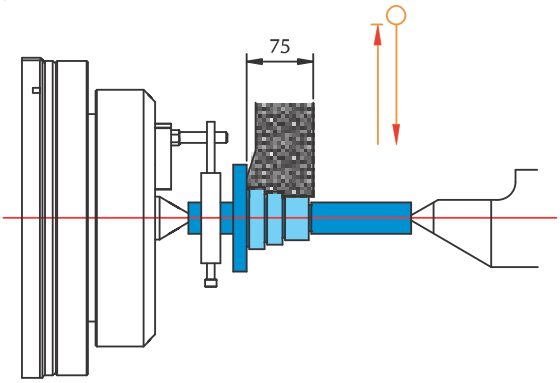

in One!
grinders from JAINNHER!

Angular Wheelhead

VARIOUS GRINDING APPLICATIONS:

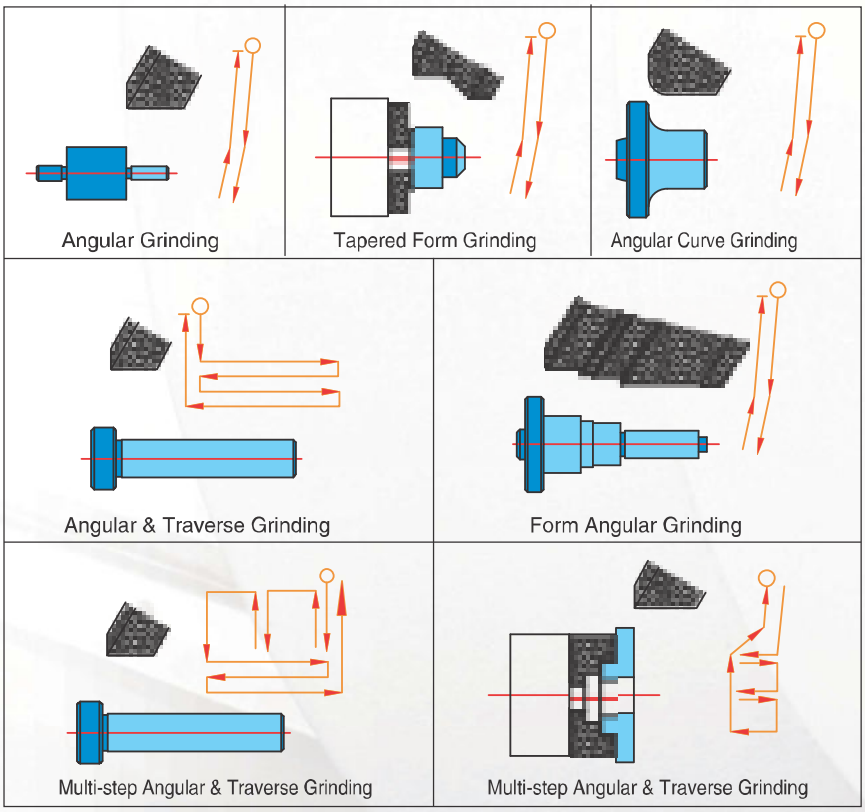

WHEEL DRESSING CYCLE:

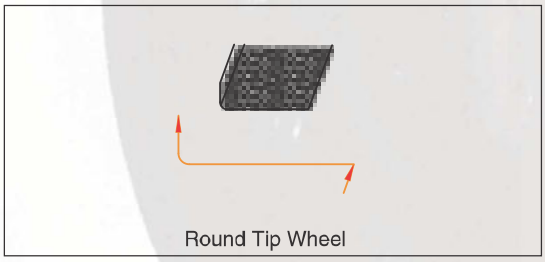

GRINDING EXAMPLE :

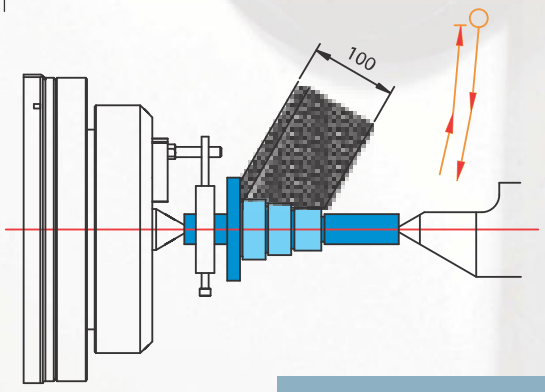

Advanced Design Concepts!

Extra Powerful Functions!

WHEEL SPINDLE

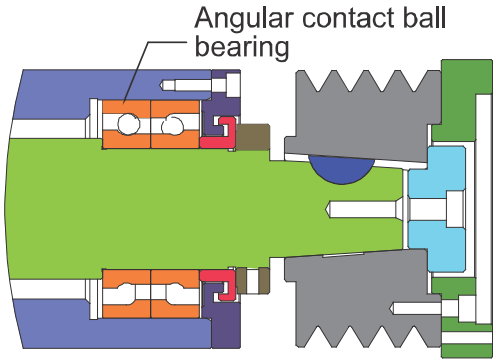

Bearing type spindle (2003A / P)

- High precision and maximum rigidity grinding wheel spindle design
- The sleeve spindle used 6 P4-class angular contact ball bearings, with 4 bearings on grinding wheel side, 2 bearings on pulley side for increasing spindle turning pressure. The whole sleeve spindle was precisely assembled and tested then balancing adjusted to reduce vibration.

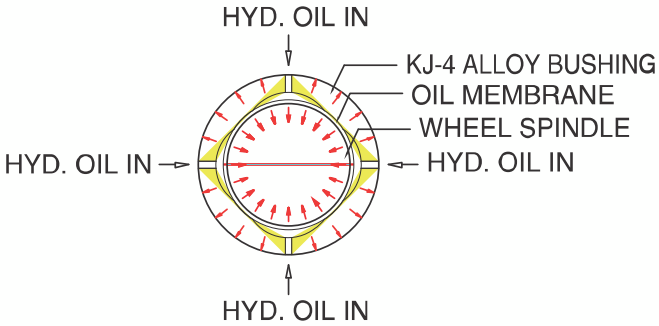

Hydrostatic bearing

- The wheel spindle is supported by 20kg/cm² high pressure oil at axial and radial direction.
- This design eliminates contact-friction between metals without the need to replace parts. Outstanding features of the spindle include high rigidity, high accuracy, long service life, minimum vibration and low heat growth, etc.

The hydraulic oil membrane generates pressure to support the wheel spindle at the radial center. IN addition, the pressure created by the hydraulic oil membrane provides protection for the wheel spindle.

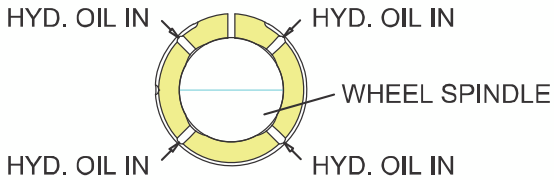

Hydrodynamic bearing

- The spindle is supported by oil membrane, as almost without metal contact between bearing and spindle, the spindle is less wearing and has a long and lasting life.
- As oil membrane exist between bearing and spindle which increase contact area, therefore, workpieces can reach highest precision and roundness.
- Oil membrane absorbs vibration during grinding process, the workpieces will be kept the best surface roughness.
- The wheel spindle is supported by 3kg/cm² low pressure oil at radial direction.

JAINNHER Insists on Performance!

SPINDLE TRANSMISSION SYSTEM

- Belt tension force is resisted by fix bushing.
- The spindle pulley is equipped with buffering pad.

Belt tension force exertion on fix bushing without affecting the wheel spindle.

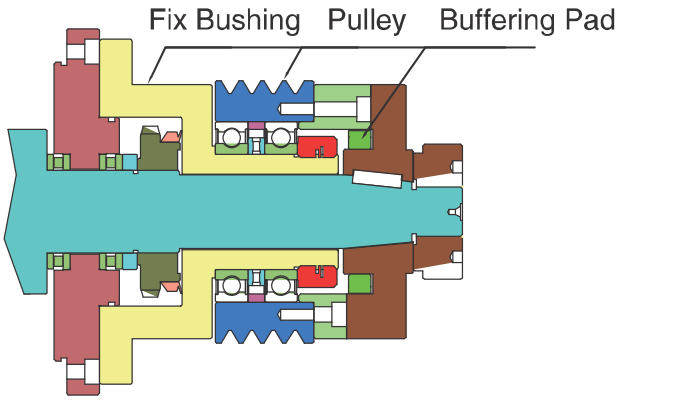

- The instant impact force caused by motor starting is absorbed by buffering pad.
- The impact force does not directly affect the wheel spindle.

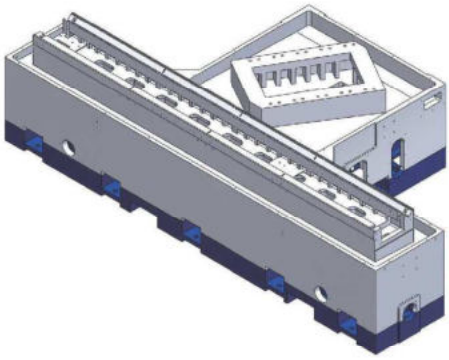

ONE-PIECE FABRICATED BASE

Deformation-free

- The machine base is one-piece manufactured from Meehanite cast iron, tempered for maximum stability of material.
- Box type base construction features superior stability and rigidity.
- The base permits fast coolant exhaust, preventing thermal deformation from influencing machine accuracy.

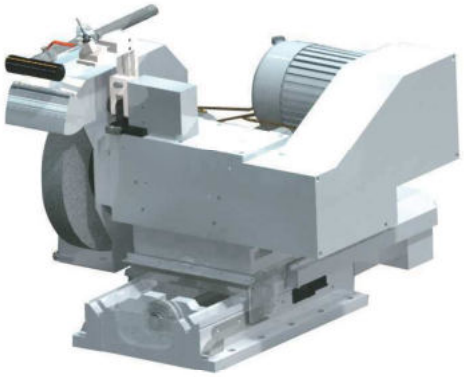

WHEELHEAD FEEDING SADDLE

Equipped with 0.0005mm Linear Scale for Feedback Control

- The wheelhead moves on double "V" slideways.
- Top slideway surfaces are coated with Turcite-B and precision scraped.
- Equipped with high resolution 0.0005mm linear scale for close-loop feedback.

Performance is our tenacity

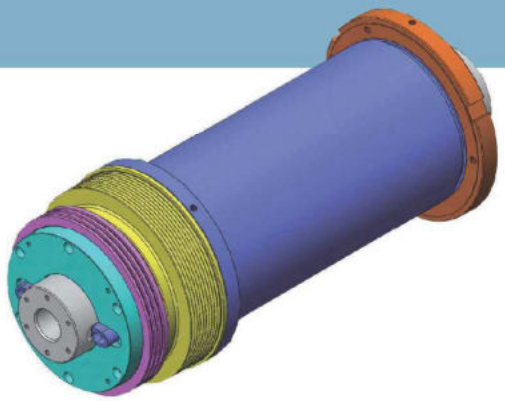

CARTRIDGE TYPE WORK HEAD SPINDLE (OPTIONAL)

WORK HEAD

Maximum Rigidity!

High precision!

- The cartridge spindle is supported by 8 P4-class angular contact ball bearings and roller bearings at front and rear end. This assures outstanding machining stability and makes the machine ideal for heavy duty machining.
- FANUC servo motor drive.
- The spindle provides centering and synchronized motion functions. Fast interchange between center and chuck.
- The work head permits 90°counter-clockwise swiveling and 30° clockwise, making the machine suitable for various grinding modes.

HYDRAULIC TAILSTOCK

- The sleeve movement is hydraulically operated for convenient workpiece loading and unloading.
- With foot pedal to control workpiece clamping and unclamping.
- Workpiece clamping and unclamping force can be adjusted by turning a knob. The sleeve is precision machined from hardened alloy, featuring maximum wear resistance and rigidity.

FANUC CNC Controller

- 0i-Mate TD Plunge /Angular type
  0i-TD type (opt.)

Mitsubishi CNC Controller

- Mitsubishi M70G

Powerful Functions JH70G_GUI Software

Form type fill in ! Easy to edit processing mode !

- JH70G_GUI software, using special form type design, easy and fast to edit program for different grinding cycles.
- Using regular program but NC editing, user can edit any processing mode.
- Easy to expand special grinding cycle, for any processing needs.
- With Mitsubishi CNC M70/M700 series controller, assure the accuracy and stability.
- Basic, grinding, dressing, auxiliary four type grinding cycle.

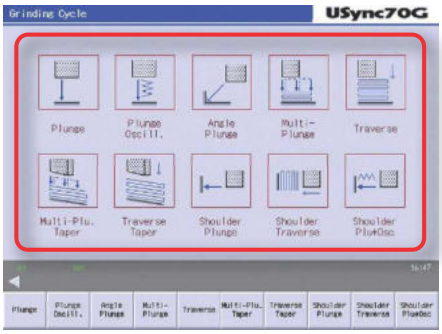

Variety Grinding Cycles

Total design for user needs! Most practical! Easy operation!

- Plunge without oscillation
- Plunge with oscillation
- Angle plunge grinding
- Multi-plunge grinding
- Traverse grinding
- Multi-plunge taper grinding
- Traverse taper grinding
- Shoulder plunge without oscillation
- Shoulder traverse grinding
- Shoulder plunge with oscillation

HYDRAULIC PRESSURE SENSOR

- The pressure switch provides pressure sensing function. The spindle can't start until lubrication oil pressure reaches the setting value. In case hydraulic system is abnormal, spindle running stops.
- When setting pressure, fast response can be achieved in case pressure error is within 5kg.

HIGH PRESSURE OIL SYSTEM

- The high pressure oil system includes high pressure filter can, accumulator, pressure switch, check valve and throttle valve. Pressure can be adjusted in axial and radial direction.
- In case power failure occurs, the accumulator may keep pressure for 5 minutes.

AUTOMATIC LUBRICATION SYSTEM

- All moving and running parts are lubricated by automatic lubrication system.
- The lubrication system is separately mounted from the machine to avoid vibration and facilitate heat dissipation.

ADVANCED OPTIONAL EQUIPMENT

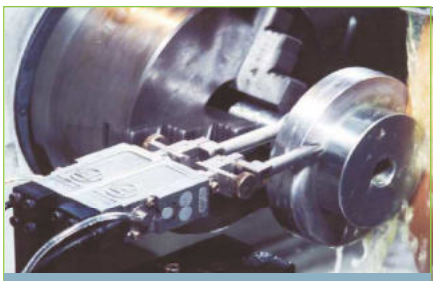

Thickness measturing gauge(optional)
Marposs/BS

Touch probe gauge (optional)
T18/PR3

Z-axis linear scale (optional)

Auto in-process gauge (optional)
Marposs

Auto in-process gauge (optional)
BS

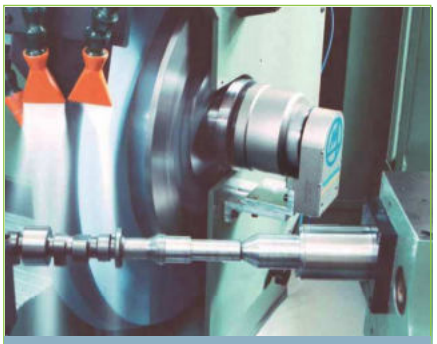

Wheel balancing system (optional)
Marposs

Wheel balancing system (optional)
BS

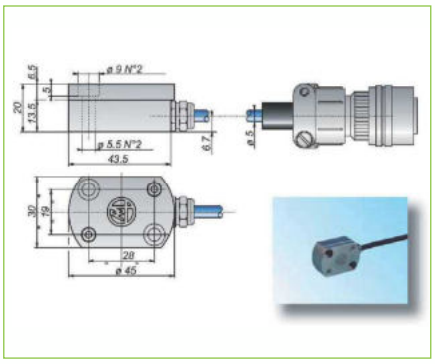

Wheel crash control device
Marposs

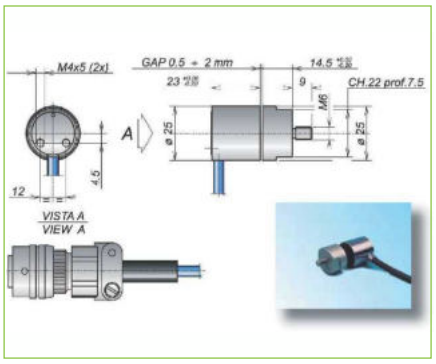

BS

STANDARD EQUIPMENT

(A) Oil cooler (except 2003 series)

(B) X-axis linear scale

(C) Work lamp

(D) Foot pedal

(E) Angle adjustment gauge

(F) Hydraulic tailstock with manual movement

(G) Grinding wheel and flange

(H) Tungsten carbide tipped centers

(I) Automatic lubrication system

(J) High pressure oil system (hydrostatic)

(K) Low pressure oil system (hydrodynamic)

(L) Tailstock dressing device (except 2003 series)

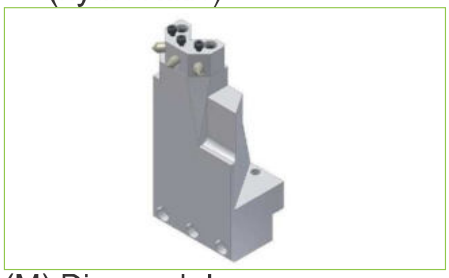

(M) Diamond dresser (Worktable)

(N) Magnetic separator + coolant tank + pump

(O) Leveling bolts and blocks

(P) Wheel lifting tool (for electric hoist)

(Q) Tool kits and toolbox

OPTIONAL EQUIPMENT

(A) 2-point steady rest

(B) 3-point steady rest

(C) Paper filter 40L/80L

(D) 5"/6"/8" 3 jaw chuck

(E) Cartridge work head spindle

(F) Center ring and drive plate

(G) Work holder

(H) Wheel lifting tool

(I) Wheel balancing stand

(J) Wheel balancing arbor

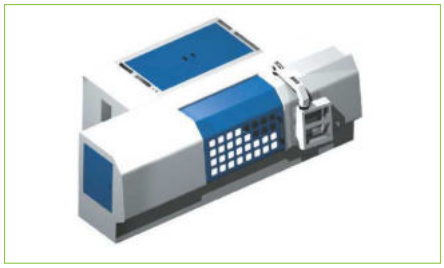

(K) Fully enclosed splash guard & Oil mist device

(L) Touch probe gauge

ITEM		MODEL	CNC PLUNGE					CNC ANGULAR				
			JHP-2003 CNC	JHP-3506 CNC	JHP-4006 CNC	JHP-3510 CNC	JHP-4010 CNC	JHA-2003 CNC	JHA-3505 CNC	JHA-4005 CNC	JHA-3508 CNC	JHA-4008 CNC
Capacity	Max. work swing		Ø200mm	Ø350mm	Ø400mm	Ø350mm	Ø400mm	Ø200mm	Ø350mm	Ø400mm	Ø350mm	Ø400mm
	Max. grinding length		300mm	600mm		1000mm		300mm	520mm		820mm	
	Max. grinding dia.		Ø200mm	Ø330	Ø380	Ø330	Ø380	Ø200mm	Ø330	Ø380	Ø330	Ø380
	Max. job weight		80kg	150kg				80kg	150kg			
	Distance between centers		300mm	600mm		1000mm		300mm	600mm		1000mm	
	Center height		100	175	200	175	200	100	175	200	175	200
Grinding wheel	Grinding wheel sizes		Ø355 or Ø405	Ø510x50~100xØ203.2				Ø405x38~50xØ127	Ø610x50~100xØ203.2			
	Grinding wheel speed		1780rpm	1250rpm				1560rpm	1250rpm			
	Max. peripheral speed		33 m/sec	33 m/sec				33 m/sec	40 m/sec			
Wheel head	Feed angle		90°					60°				
	Swivel angle		± 0°					± 0°				
	Rapid traverse speed		6 m/min					6 m/min				
	Max. travel		270mm	280mm				270mm	210mm			
	Min. setting unit		0.001mm					0.001mm				
	Grinding feed rate		0.001~6000 mm/min					0.001~6000 mm/min				
	Hydrostatic pressure		Hydr. D. 3kg	Hydr. D. 3kg / Hydr. S. 20kg				Hydr. D. 3kg	Hydr. D. 3kg / Hydr. S. 20kg			
Tailstock	Retraction of sleeve		30mm					30mm				
	Sleeve diameter		D:50mm	D:70mm				D:50mm	D:70mm			
	Center taper		NO#3	NO#4(Opt.NO.#5)				NO#3	NO#4(Opt.NO.#5)			
	Hydraulic cylinder pressure		20kg					20kg				
Work head	Spindle speed (variable)		10~500 rpm/min					10~500 rpm/min				
	Center taper		NO#3	NO#4(Opt.NO.#5)				NO#3	NO#4(Opt.NO.#5)			
	Spindle type		Cartridge type Short type					Cartridge type Short type				
	Swivel angle		120(90CCW；30CW)					120(90CCW；30CW)				
Work table	Swivel angle (C.W.)		+10	+9		+7		+10	+9		+7	
	Swivel angle (C.C.W.)		-3	-5		-4		-3	-5		-4	
	Rapid traverse speed		8 m/min	10 m/min				8 m/min	10 m/min			
	Min. setting unit		0.001mm					0.001mm				
	Max. travel		680mm	700mm		1100mm		680mm	600mm		900mm	
	Grinding feed rate		0.001~6000 mm/min					0.001~6000 mm/min				
Motor	Grinding wheel spindle		5HP 4P(Opt. 7.5HP 4P)	7.5HP 4P(Opt.10HP 4P)				5HP 4P(Opt. 7.5HP 4P)	10HP 4P(Opt.15HP 4P)			
	Work head		1.0KW	1.5KW				1.0KW	1.5KW			
	Work table feeding (Z-axis)		1.2KW	1.8KW				1.2KW	1.8KW			
	Wheel table feeding (X-axis)		1.2KW	1.8KW				1.2KW	1.8KW			
	Hydraulic pump		1/4HP 4P	1HP 4P				1/4HP 4P	1HP 4P			
	Wheel head pump		Hydr. D. 1/2HP 4P	Hydr. D. 1HP 4P / Hydr. S. 2HP 4P				Hydr. D. 1/2HP 4P	Hydr. D. 1HP 4P / Hydr. S. 2HP 4P			
	Coolant pump		1/8HP 2P	1/2HP 2P				1/8HP 2P	1/2HP 2P			
	Magnetic coolant separator		1/25HP 2P	1/25HP 2P				1/25HP 2P	1/25HP 2P			
	Oil cooler		———	Hydr. S. 600W / Hydr. D. 400W / Slide 250w				———	Hydr. S. 600W / Hydr. D. 400W / Slide 250w			
Oil tank	Hyd. Oil tank (slideways, screw ends & measurement)		30L	60L				30L	60L			
	Wheel head lubrication		20L	50L				20L	50L			
	Coolant tank		80L	160L				80L	160L			
Machine	N.W.	Fully enclosed	2300kg	7460kg		8080kg		2300kg	7460kg		8080kg	
		Semi-enclosed	2100kg	6840kg		7800kg		2100kg	6840kg		7800kg	
	G.W.	Fully enclosed	2600kg	7860kg		8480kg		2600kg	7860kg		8480kg	
		Semi-enclosed	2400kg	7240kg		8200kg		2400kg	7240kg		8200kg	
	Machine dimensions (LxWxH)	Fully enclosed	2.5 x 2.1 x 1.9	4.1 x 2.1 x 2.0		4.9 x 2.1 x 2.0		2.5 x 2.1 x 1.9	4.1 x 2.1 x 2.0		4.9 x 2.1 x 2.0	
		Semi-enclosed	2.1 x 2.1 x 1.9	3.3 x 2.1 x 1.85		4.2 x 2.1 x 1.85		2.1 x 2.1 x 1.9	3.3 x 2.1 x 1.85		4.2 x 2.1 x 1.85	
	Packing dimensions (LxWxH)	Fully enclosed	2.7 x 2.2 x 2.1	4.29 x 2.2 x 2.2		5.09 x 2.2 x 2.2		2.7 x 2.2 x 2.1	4.29 x 2.2 x 2.2		5.09 x 2.2 x 2.2	
		Semi-enclosed	2.3 x 2.2 x 2.1	3.48 x 2.2 x 2.1		4.38 x 2.2 x 2.1		2.3 x 2.2 x 2.1	3.48 x 2.2 x 2.1		4.38 x 2.2 x 2.1	

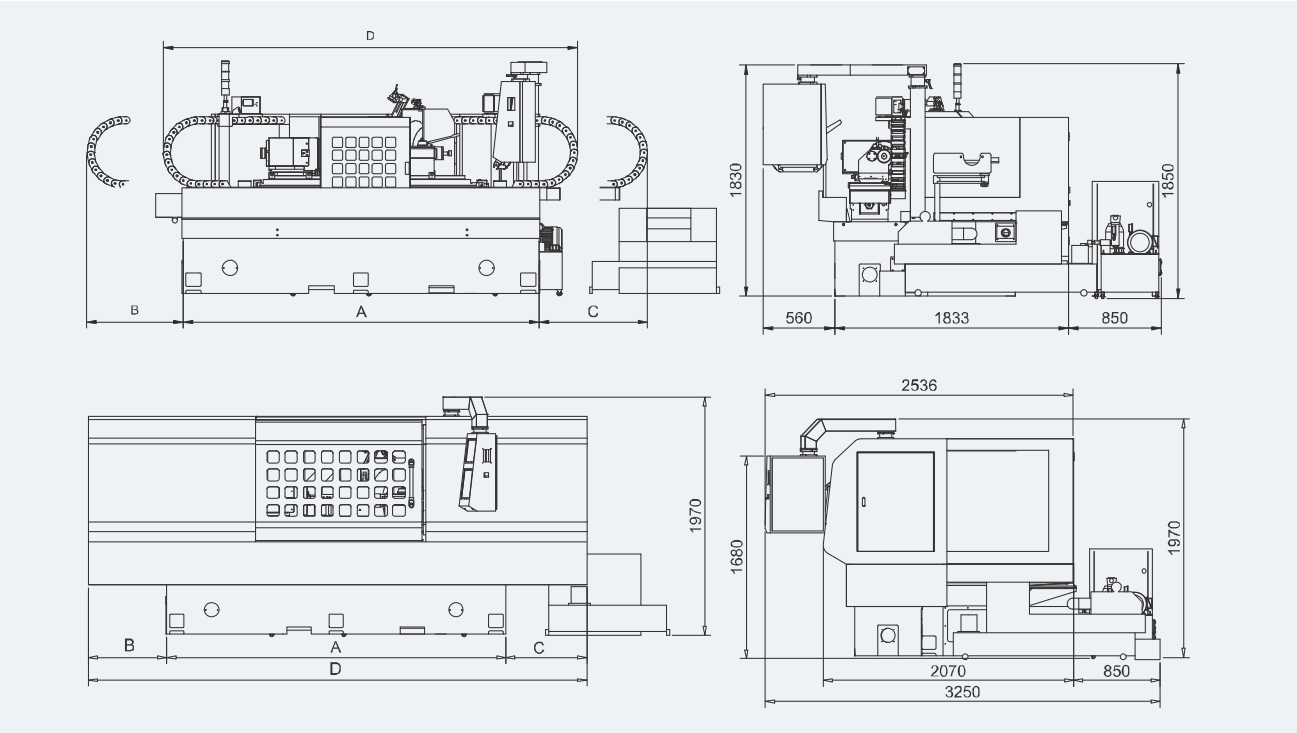

	3505A/3506P Fully enclosed	3508A/3510P Fully enclosed	4005A/4006P Semi-enclosed	4008A/4010P Semi-enclosed
A	2792	3592	2792	3592
B	650	780	760	775
C	670	800	855	830
D	4112	5172	3310	4110

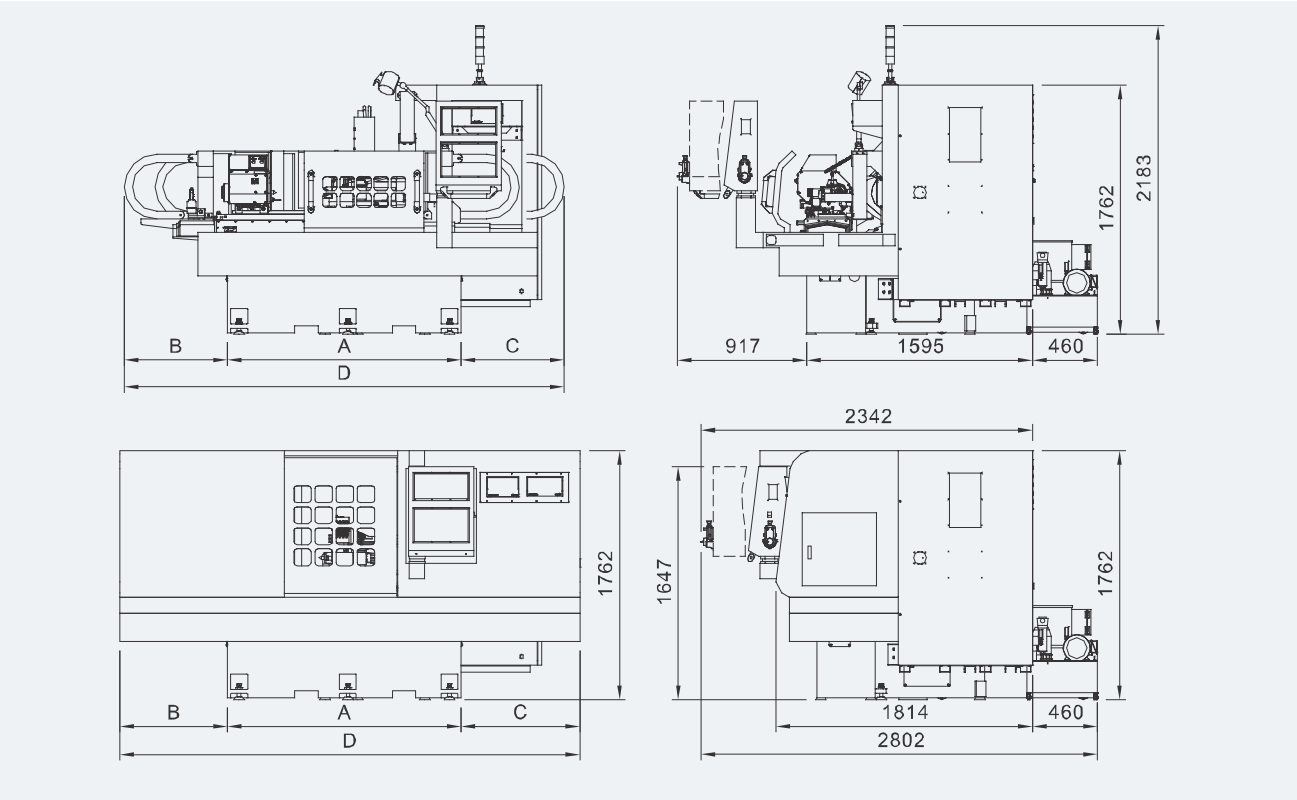

	2003A Semi-enclosed	2003P Semi-enclosed	2003A Fully enclosed	2003P Fully enclosed
A	1650	1650	1650	1650
B	713	731	760	760
C	830	731	840	840
D	3193	3112	3250	3250

嘉尼赫®
JAINNHER®
鍵和機械股份有限公司
JAINNHER MACHINE CO., LTD.

407台中市西屯區台中工業區 28 路 333號
No. 333, 28th Rd., Taichung Industrial Park, Taichung, Taiwan 407
TEL: 886-4-2358-5299 FAX: 886-4-2359-4803
E-mail: saledep@jainnher.com.tw
www.jainnher.com.tw

昆山嘉尼赫機械有限公司
KUN SHAN JAINNHER MACHINE

昆山市陸家鎮仕泰隆國際機械模具城B棟8號
昆山//TEL:+86-512-81867171, +86-512-81867575
FAX:+86-512-81867979

1000.2010.12